Abloy Oy Wahlforssinkatu 20 P.O. Box 108 FI-80101 Joensuu, Finland | Tel. +358 20 599 2501 | abloy.com

ABLOY® EL570, EL571

High security ANSI standard handle controlled lock

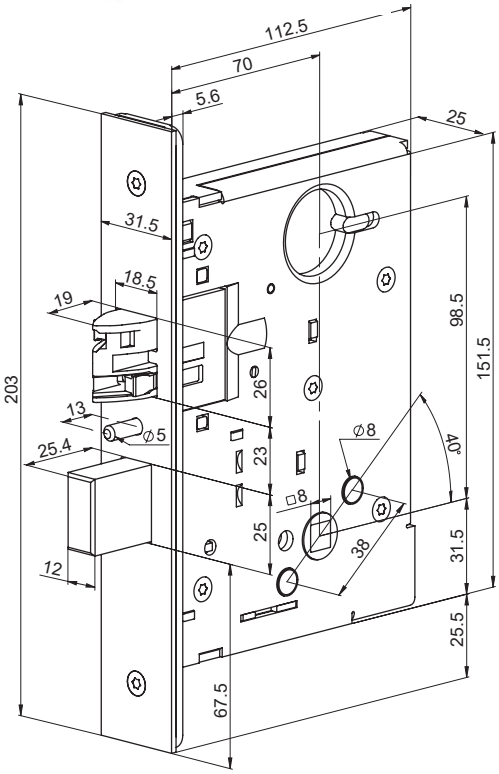

Product description
The high security locks with handle control EL570 and EL 571 are used especially in situations where the advantages of handle-controlled unlocking have to be combined with the mechanical security requirements. The integrated monitoring contacts from the lock can be connected to the different systems.
External handle is engaged electrically, e.g. by electric access control. By pressing engaged handle, dead bolt is retracted and double action latch released.
Inside handle opens lock mechanically (exit function), no need for electric control.
When door closes, dead bolt is thrown out automatically, latch bolt is blocked and the lock cases is secured in two points.
The exit side settings and selecting between fail-locked and fail-unlocked can be performed on the lock as required.
EL570 with split spindle (inside handle works always), EL571 with solid spindle (both sides controlled).

Overview of Advantages
- Mechanical automatic locking system
- Non handed, left / right
- Exit side can be changed over
- Can be changed between fail-unlocked & fail-locked
- Burglary-resistant due to dead bolt with 25.4 mm throw
- Exit function by inside handle
- Suitable for fire doors
- Controllable external handle
- Mechanical override with cylinder from outside
- Monitoring functions
    - Door closed
    - Dead bolt and latch dead locked
    - Handle indication, inside and outside handle

Scope of delivery
- 1 pcs lock case and strike plate
- Operating manual and drilling template

Technical data

Handing	Non handed, left / right
Exit function	Yes
Mechanical cylinder override	Yes
Latch	Double action latch
Suitable for fire doors	Yes
Monitoring contacts	Yes
Load bearing capacity micros witch	0.1 A, 30 VAC / DC, resistive load
Input operating voltage	12-24 DCV
Rated current consumption	12 V DC idle 240 mA, max. 550 mA 24 V DC idle 130 mA, max. 300 mA
Bolt strength	Latch bolt: 5300N
	Dead bolt: 6000N
Bolt load	Latch bolt: 1600N
	Dead bolt: 2700N
UL File numbers	UL1034: BP8853 Vol 1
Certification	R38564
BHMA evaluation	BH25
Weight	1.39 kg

This content is protected by Intellectual Property Rights Laws. The title to the content shall not pass to you, and instead shall remain with Abloy Oy or a third party holding the title. Abloy develops continuously the products and solutions offered. Therefore, the information contained in the document is subject to change without notice. ABLOY PROVIDES THIS CONTENT ON AN "AS IS" BASIS WITHOUT ANY WARRANTIES OF ANY KIND, EXPRESS, IMPLIED, OR STATUTORY."

ABLOY